GA-2配線図

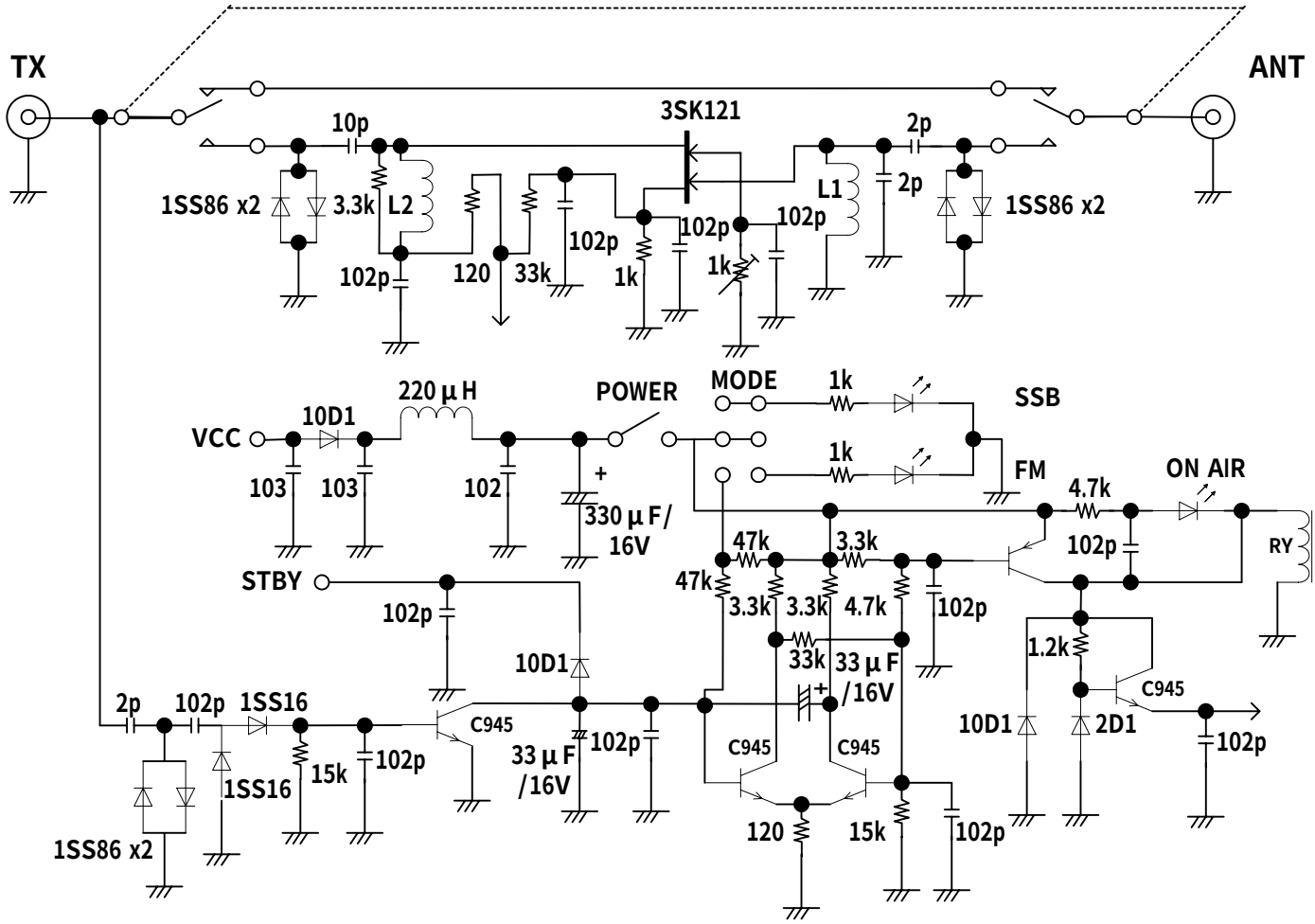
TX
ANT
3SK121
10p
2p
1SS86 x2
3.3k
L2
L1
102p
120
33k
1k
1SS86 x2
220μH
POWER
MODE
SSB
VCC
10D1
103
103
102
330μF/
16V
FM
ON AIR
4.7k
47k
3.3k
RY
STBY
33k
33μF
/16V
1.2k
C945
2p
1SS16
15k
10D1
2D1
C945
1SS86 x2